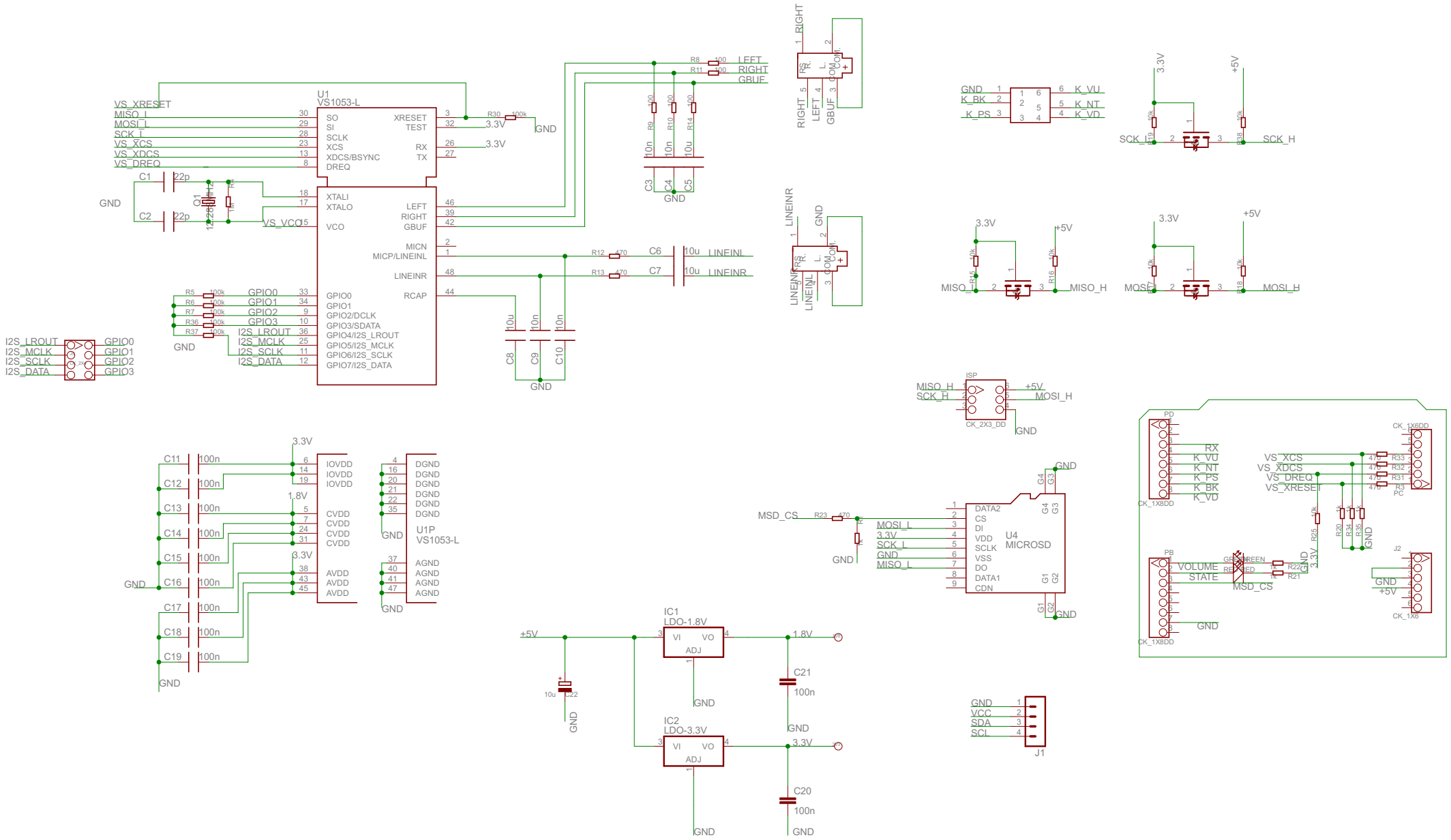

2012-11-26 19:37:47 f=0.76 F:\工作\Work\MP3 Shield\52.6x51mm MP3 Shield v2.0\MP3_Shield_V2.0\MP3 Shield V2.0.sch (Sheet: 1/1)