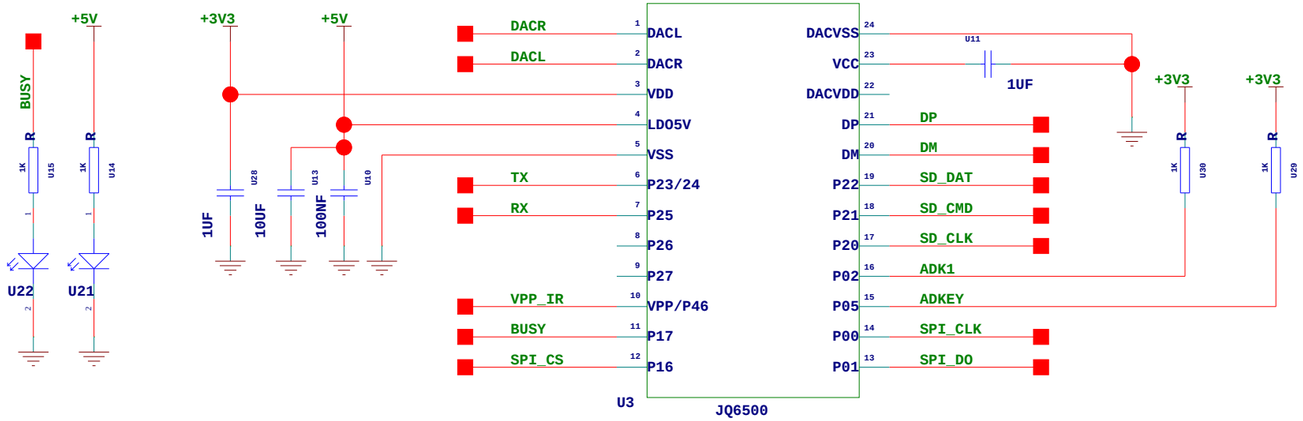

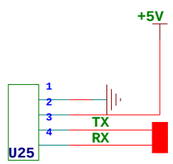

MCU

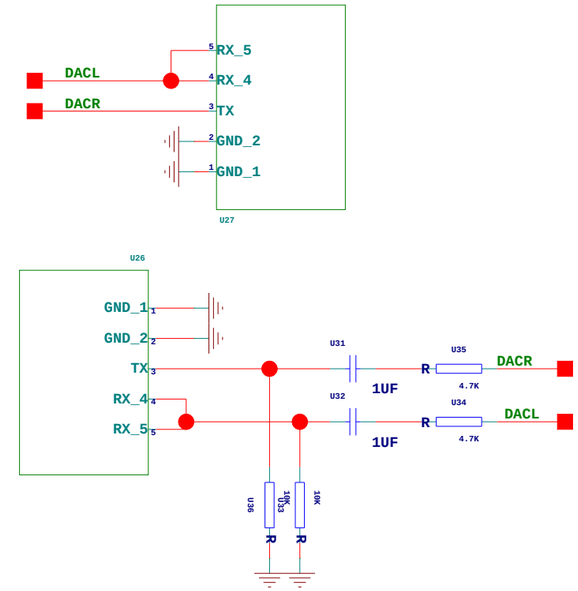

MIC INTERFACES

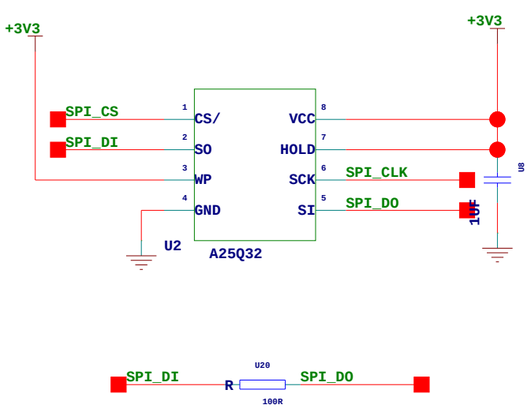

FLASH

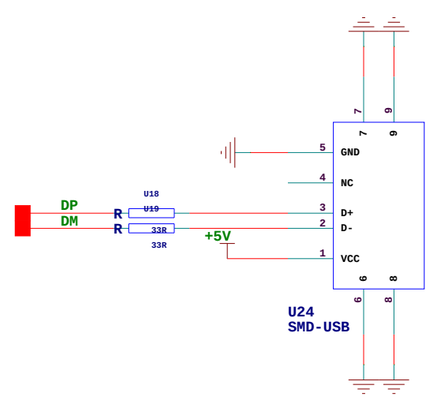

USB

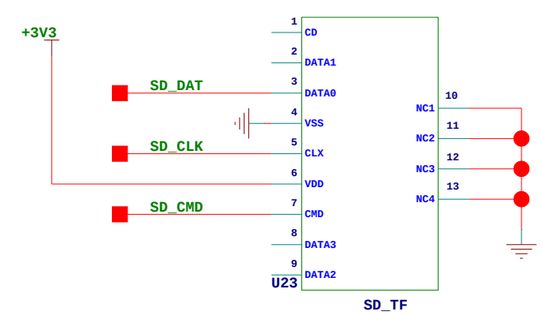

SD CARD